LACAVA

LIRICO

LIR-F-48A

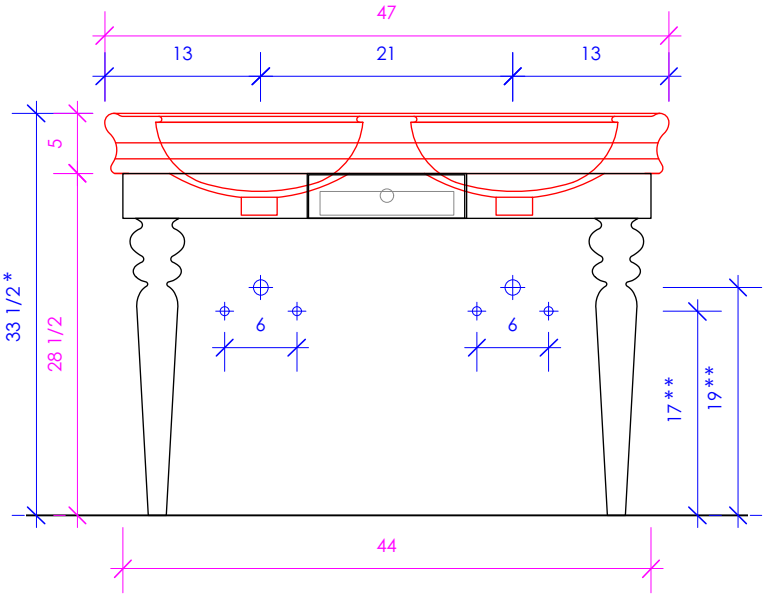

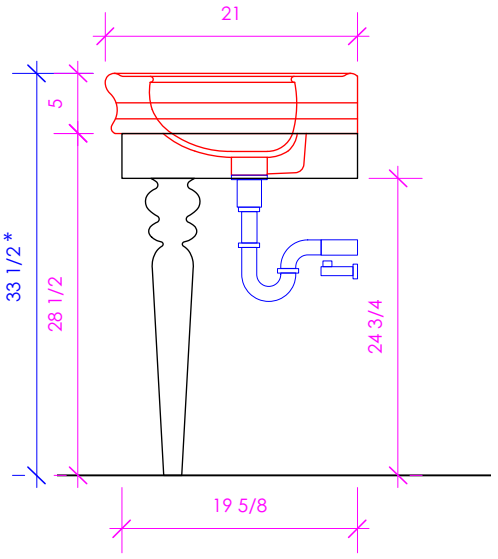

* Recommended installation height
** Recommended plumbing location

FEATURES:

- FLOOR STANDING CONSOLE VANITY
- ORNATE SOLID WOOD LEGS
- ONE DRAWER WITH SELF-CLOSE GLIDES
- DRAWER BOXES STAINED TO REFLECT EXTERIOR FINISH
- DECORATIVE HARDWARE K350 INCLUDED BUT NOT INSTALLED - CAN BE INSTALLED UPON REQUEST
- USED WITH H253 SINK (SOLD SEPARATELY)
- MOUNTING: FULL WOOD BACKING (SEE FURNITURE MANUAL)
- PROUDLY HANDMADE IN THE USA
- MANUFACTURED WITH LOW VOC FINISHES AND WOOD FROM RENEWABLE FORESTS

FINISHES:

WOOD:

STANDARD:

02 - NATURAL CHERRY
07 - NATURAL WALNUT
24 - CLASSIC WALNUT
20 - ASH GRAY
06 - WENGE
33 - AFRICAN MAHOGANY

PREMIUM:

22 - GRAY ZEBRA
31 - WHITE OAK
27 - RUSTIC
47 - SMOKY WALNUT

08 - MATTE WHITE
35 - MATTE ARDESIA
54 - MATTE TAUPE
16 - MATTE BLACK

LUXURY:

37 - WEATHERED OAK
52 - SILVER OAK
50 - HORIZON BLUE

85 - GLOSS WHITE
88 - GLOSS ARDESIA
84 - GLOSS TAUPE
86 - GLOSS BLACK

46 - DRIFTWOOD *NEWTERRA ONLY*

08T1 - WHITE W/ TEXTURE
35T1 - ARDESIA W/ TEXTURE
54T1 - TAUPE W/ TEXTURE
16T1 - BLACK W/ TEXTURE

COUNTERTOP:

STONE:

WH - BIANCO
LN - LINAC
SL - ATHENS

QUARTZ:

PR - PURO
AH - ASH

SOLID SURFACE:

M - SATIN WHITE
G - POLISHED WHITE
R - MARMO
V - LAVA
D - OBSIDIAN

CONCRETE:

SND - SAND
SLT - SLATE
TER - TERRACOTTA
CHL - CHARCOAL

METALS:

METAL:

21 - BRUSHED STAINLESS STEEL
10 - POLISHED STAINLESS STEEL

44 - MATTE BLACK
MW - MATTE WHITE
BPW - BRASS POWDER COAT

LACAVA reserves the right to revise any dimension or information on this sheet without notice. Dimensions are nominal and may vary within an industry accepted tolerance of 1/4". Cabinets with 'vanity top' sinks are made to the matching sink and dimensions may vary. LACAVA is not responsible for any cutouts, countertops, or furniture made without the actual product or template. Differences in color, grain, appearance, and texture are inherent in all natural woodwork and should be expected. Variances in these qualities are not deemed manufacturing defects and will not be accepted as valid reasons for return or exchanges. Plumbing specifications are only a guideline and may need alteration based on application.

6630 WEST WRIGHTWOOD
CHICAGO, IL 60707

PH: 773-637-9600
FAX: 773-637-9601

LACAVA.COM
INFO@LACAVA.COM